REV.	DESCRIPTION	DATE
A	按客户图纸出图	20230627

正视图　侧视图　背视图　弯折效果图

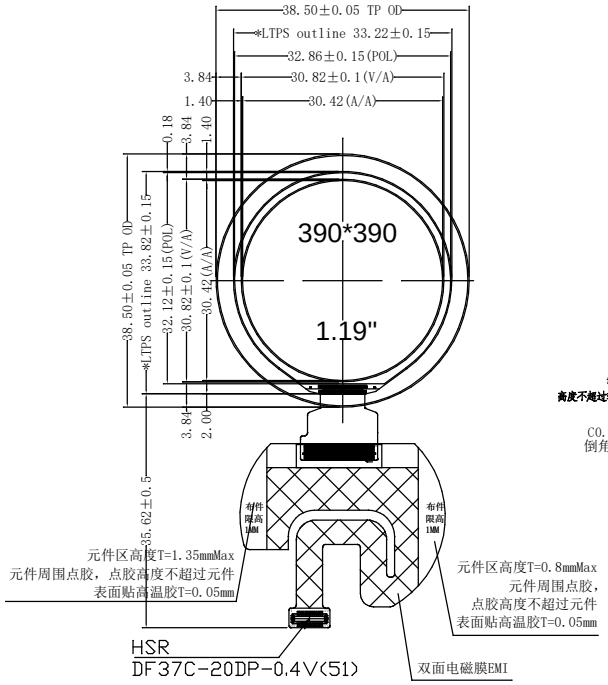

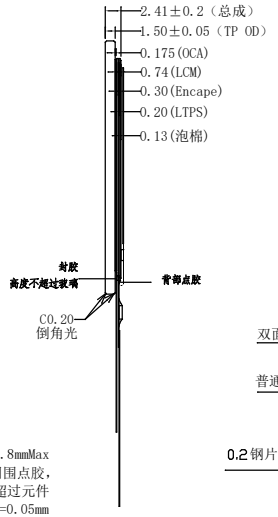

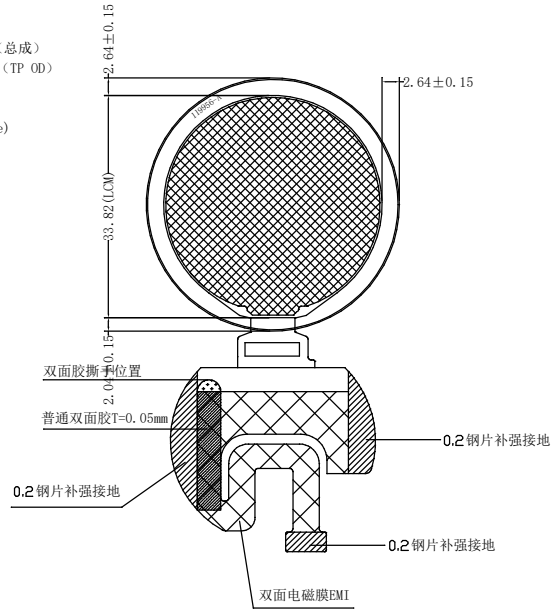

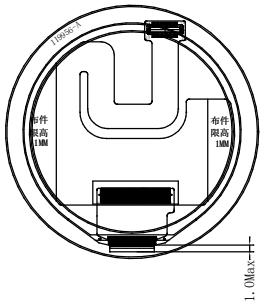

接口支持：QSPI接口

NO.	SYMBOL
Pin Assignment	
1	SPIC2 CS
2	SPIC2 SI00
3	SPIC2 SI01
4	SPIC2 SCK
5	SPIC2 SI03
6	SPIC2 SI02
7	不连接，不走线(MDP)
8	VCI EN
9	RST
10	80 TE/TE
11	P VDD/IOVCC（3.3V）
12	不连接，不走线
13	不连接，不走线
14	VBAT
15	不连接，不走线
16	GND
17	GND
18	GND
19	GND
20	GND

NOTES:

1. OPERATING TEMPERATURE:-10° C TO 60° C
2. STORAGE TEMPERATURE: :-20° C TO 70° C
3. DRIVING IC:CO5300
4. DISPLAY MODE:LTPS-AMOLED
5. GENERAL TOLERANCE: ±0.20mm
   () MEANS DIMENSION FOR REFERENCE
6. SPECIAL REQUIRE:NO
7. WITH" * " MARK DIMENSIONS ARE IMPORTANT DIMENSIONS.
8. WITH"( )" MARK DIMENSIONS ARE REFERENCE DIMENSIONS.
9. REQUIREMENTS ON ENVIRONMENTAL PROTECTION: ROHS .

APPROVALS	DATE	SCALE 1:1	TITLE MODULE
DRAWN: yk			
CHECK:		UNIT mm	
APPROVAL:			MODEL PV11902F0120C-CO
Kingtech Group Co.,Ltd			DWG NO A / PAGE 1/1